ROTARY CONTROL VALVE 150 LT 1"

AÇIK DEVRE 3 YOLLU VANA 150 LT. 1"

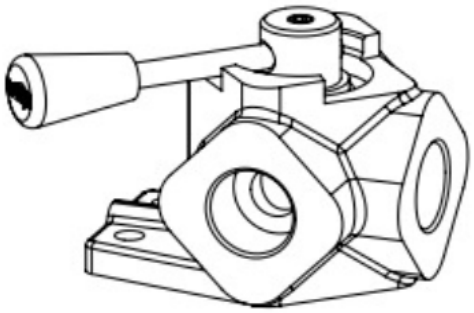

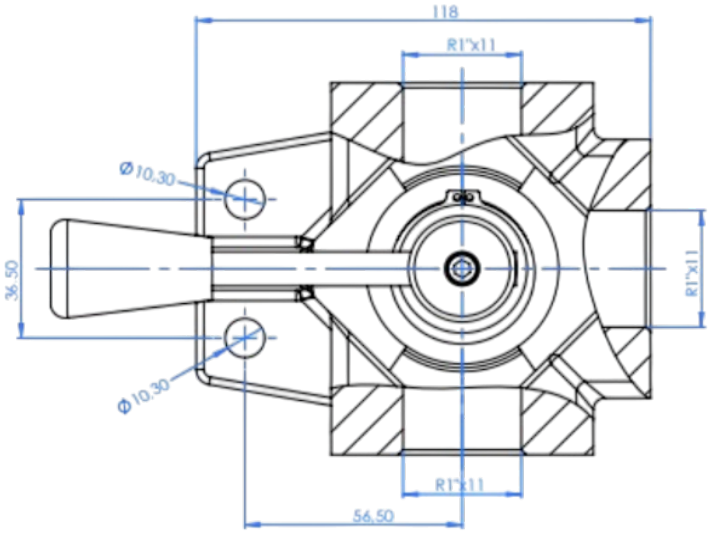

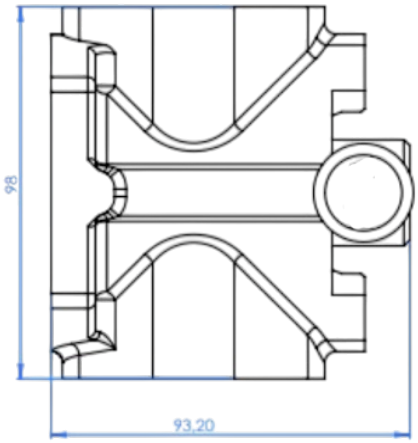

CODE	DESCRIPTION	FLOW cc/min	P.MAX BAR
GM V150 3A	ROTARY CONTROL VALVE 150 LT 1"	180 cc/min	350 BAR
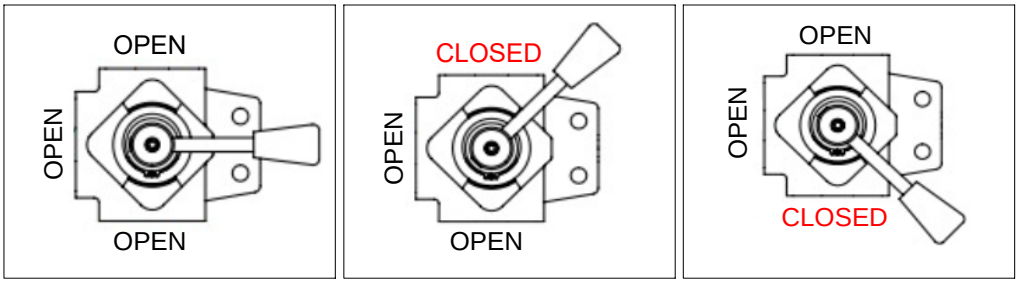
WORKING POSITIONS